UNIVERSITY OF
Southampton

University of Southampton

Trailblazers: History of Hypertext Part 2

COMP3220 Web Infrastructure

Dr Nicholas Gibbins – nmg@ecs.soton.ac.uk

Interlude, 1939-1945

Vannevar Bush

Engineer, inventor and
science administrator

- Co-founder of Raytheon (1922)
- First vice-president of MIT (1932)
- Chair of the National Advisory Committee for Aeronautics (1940-41)
- Director of the US Office of Scientific Research and Development during WWII (1941-47)
- De facto director of the Manhattan Project until 1943

Zachary, G.P. (1995) *Vannevar Bush*, IEEE Spectrum, 32(7) pp. 65-69.

Bush, V. (1931) *The differential analyzer. A new machine for solving differential equations*. Journal of the Franklin Institute. 212(4), 447-488.

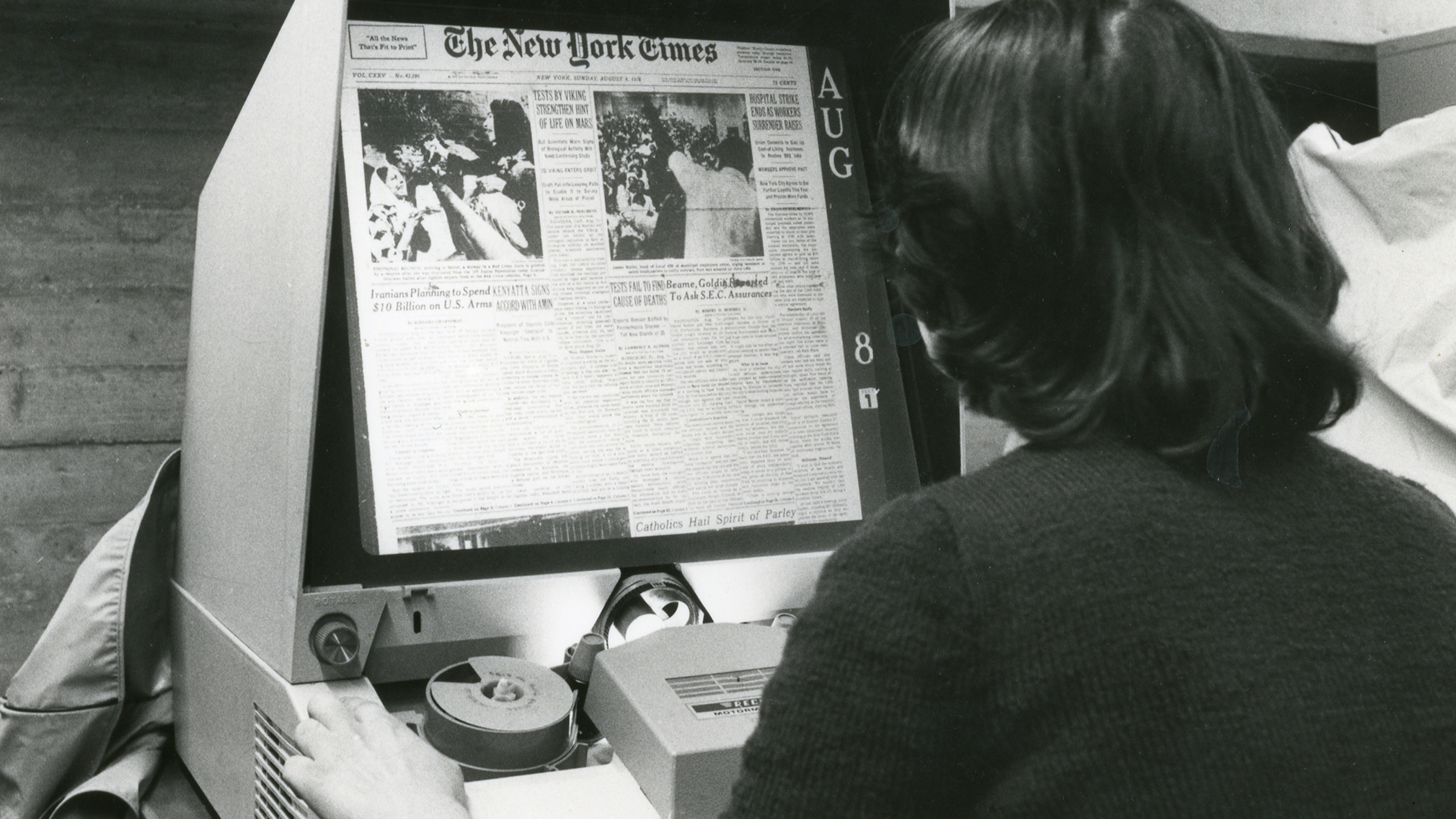
"All the News That's Fit to Print"
The New York Times
VOL. CXXV . No. 43,296
NEW YORK, SUNDAY, AUGUST 8, 1976
75 CENTS
TESTS BY VIKING STRENGTHEN HINT OF LIFE ON MARS
But Scientists Warn Signs of Biological Activity Will Need Confirming Study
2D VIKING ENTERS ORBIT
Craft Put Into Looping Path to Enable It to Survey Wide Areas of Planet
HOSPITAL STRIKE ENDS AS WORKERS SURRENDER RAISES
Union Consents to Give Up Cost-of-Living Increases to Restore 900 Jobs
MEMBERS APPROVE PACT
New York City Agrees to Bar Further Layoffs This Year and Presses More Funds
Iranians Planning to Spend $10 Billion on U.S. Arms
KENYATTA SIGNS ACCORD WITH AMIN
TESTS FAIL TO FIND CAUSE OF DEATHS
Beame, Goldin Reported To Ask S.E.C. Assurances
Catholics Hail Spirit of Parley
AUG
8

The Rapid Selector

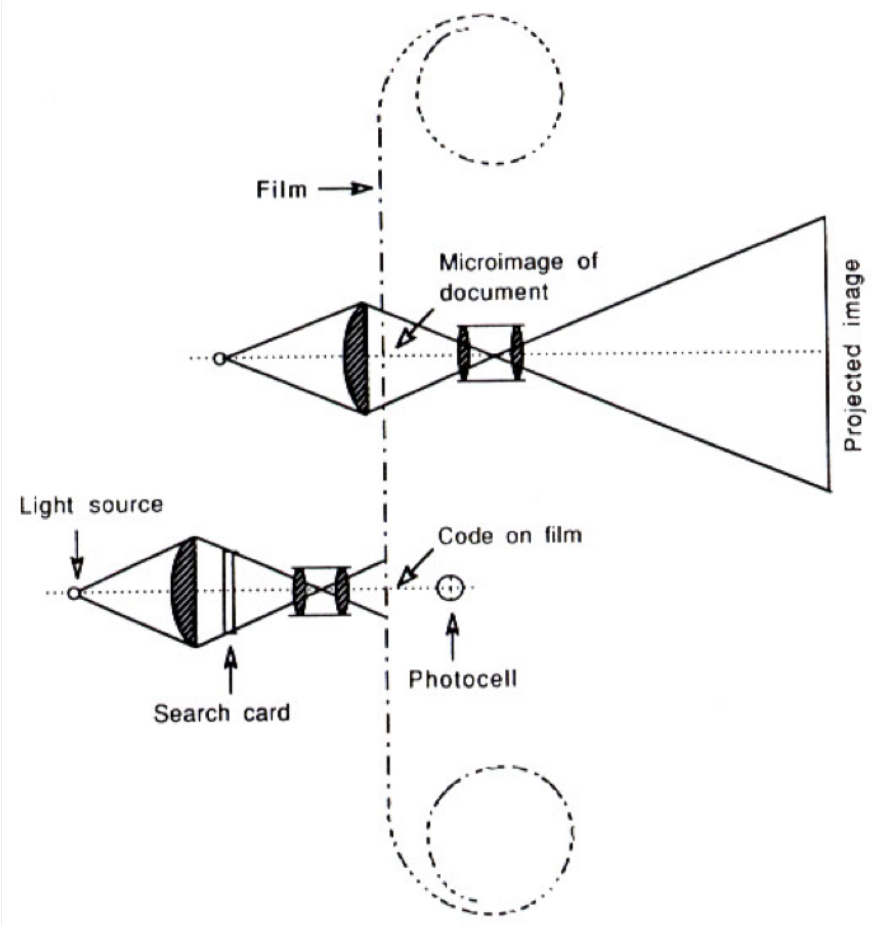

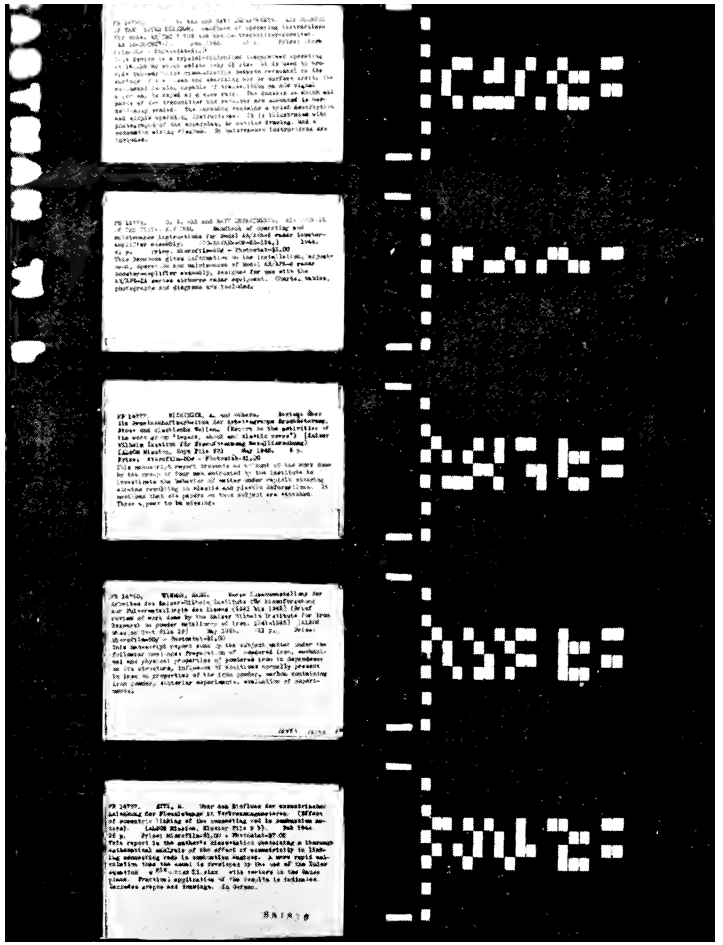

Buckland, M.K. (1992) *Emanuel Goldberg, electronic document retrieval, and Vannevar Bush's Memex*. Journal of the American Society of Information Science, 43(4), pp. 284-294.

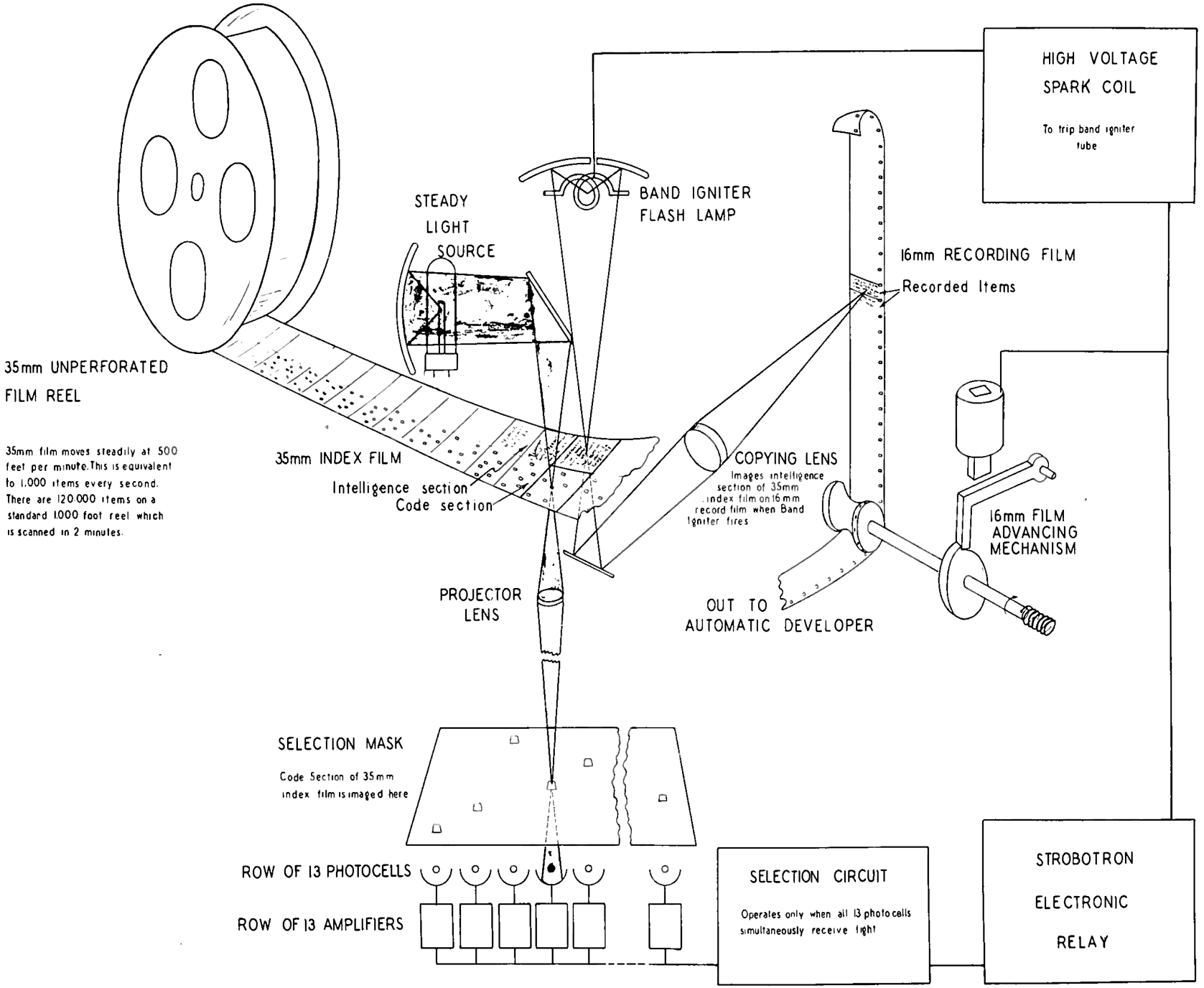
HIGH VOLTAGE SPARK COIL
To trip band igniter tube
STEADY LIGHT SOURCE
BAND IGNITER FLASH LAMP
16mm RECORDING FILM
Recorded Items
35mm UNPERFORATED FILM REEL
35mm film moves steadily at 500 feet per minute. This is equivalent to 1,000 items every second. There are 120,000 items on a standard 1,000 foot reel which is scanned in 2 minutes.
35mm INDEX FILM
Intelligence section
Code section
COPYING LENS
Images intelligence section of 35mm index film on 16mm record film when Band Igniter fires
16mm FILM ADVANCING MECHANISM
OUT TO AUTOMATIC DEVELOPER
PROJECTOR LENS
SELECTION MASK
Code Section of 35mm index film is imaged here
ROW OF 13 PHOTOCELLS
ROW OF 13 AMPLIFIERS
SELECTION CIRCUIT
Operates only when all 13 photocells simultaneously receive light
STROBOTRON ELECTRONIC RELAY

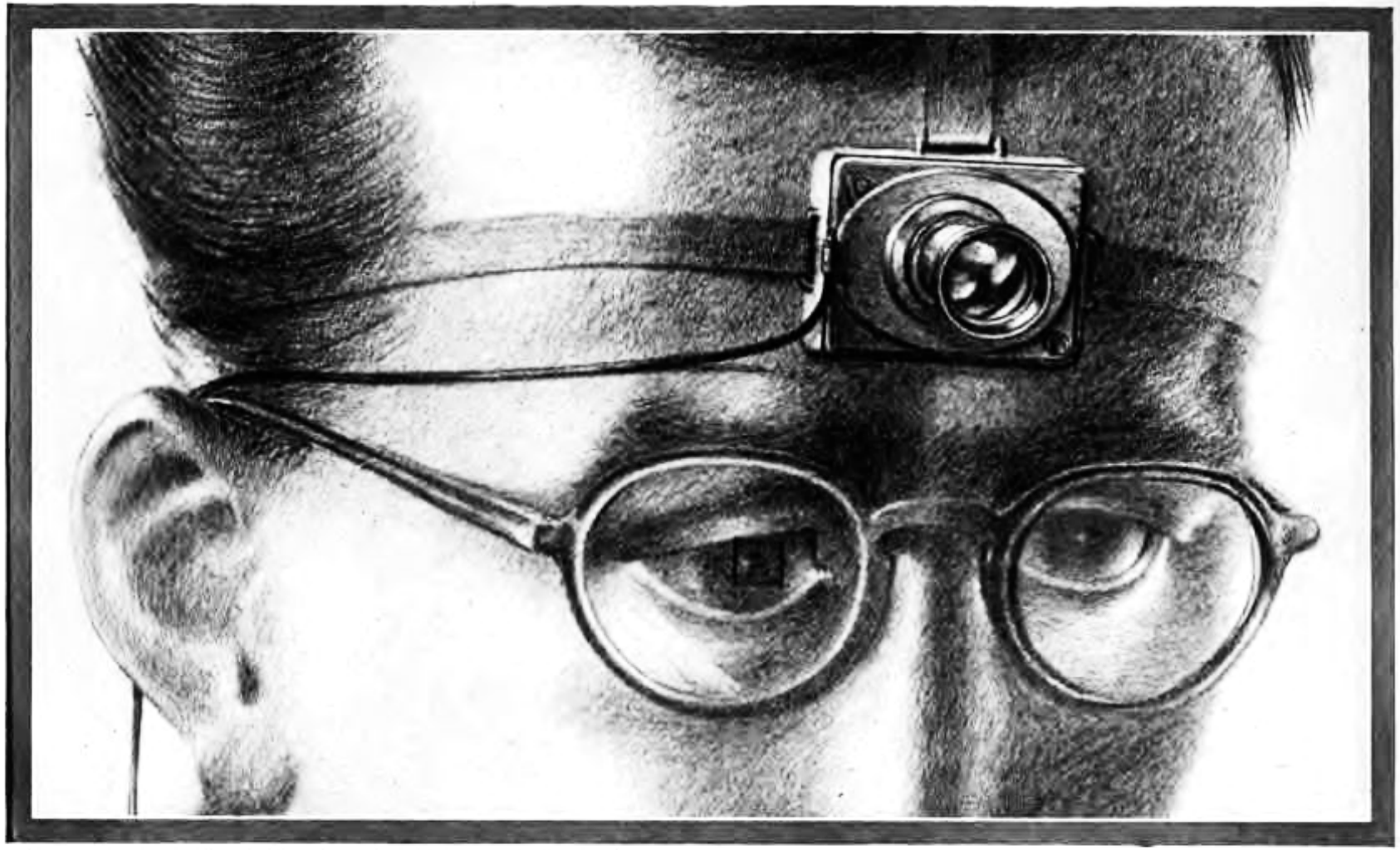

A SCIENTIST OF THE FUTURE RECORDS EXPERIMENTS WITH A TINY CAMERA FITTED WITH UNIVERSAL-FOCUS LENS. THE SMALL SQUARE IN THE EYEGLASS AT THE LEFT SIGHTS THE OBJECT

AS WE MAY THINK

A TOP U. S. SCIENTIST FORESEES A POSSIBLE FUTURE WORLD IN WHICH MAN-MADE MACHINES WILL START TO THINK

As We May Think

The difficulty seems to be, not so much that we publish unduly in view of the extent and variety of present-day interests, but rather that publication has been extended far beyond our present ability to make real use of the record.

Bush, V. (1945) *As We May Think*. The Atlantic Monthly, 176, pp.101-108.

As We May Think

Our ineptitude in getting at the record is largely caused by the artificiality of systems of indexing. When data of any sort are placed in storage, they are filed alphabetically or numerically, and information is found (when it is) by tracing it down from subclass to subclass. [...] Having found one item, moreover, one has to emerge from the system and re-enter on a new path.

Bush, V. (1945) *As We May Think*. The Atlantic Monthly, 176, pp.101-108.

As We May Think

The human mind does not work that way. It operates by association. With one item in its grasp, it snaps instantly to the next that is suggested by the association of thoughts, in accordance with some intricate web of trails carried by the cells of the brain.

Bush, V. (1945) *As We May Think*. The Atlantic Monthly, 176, pp.101-108.

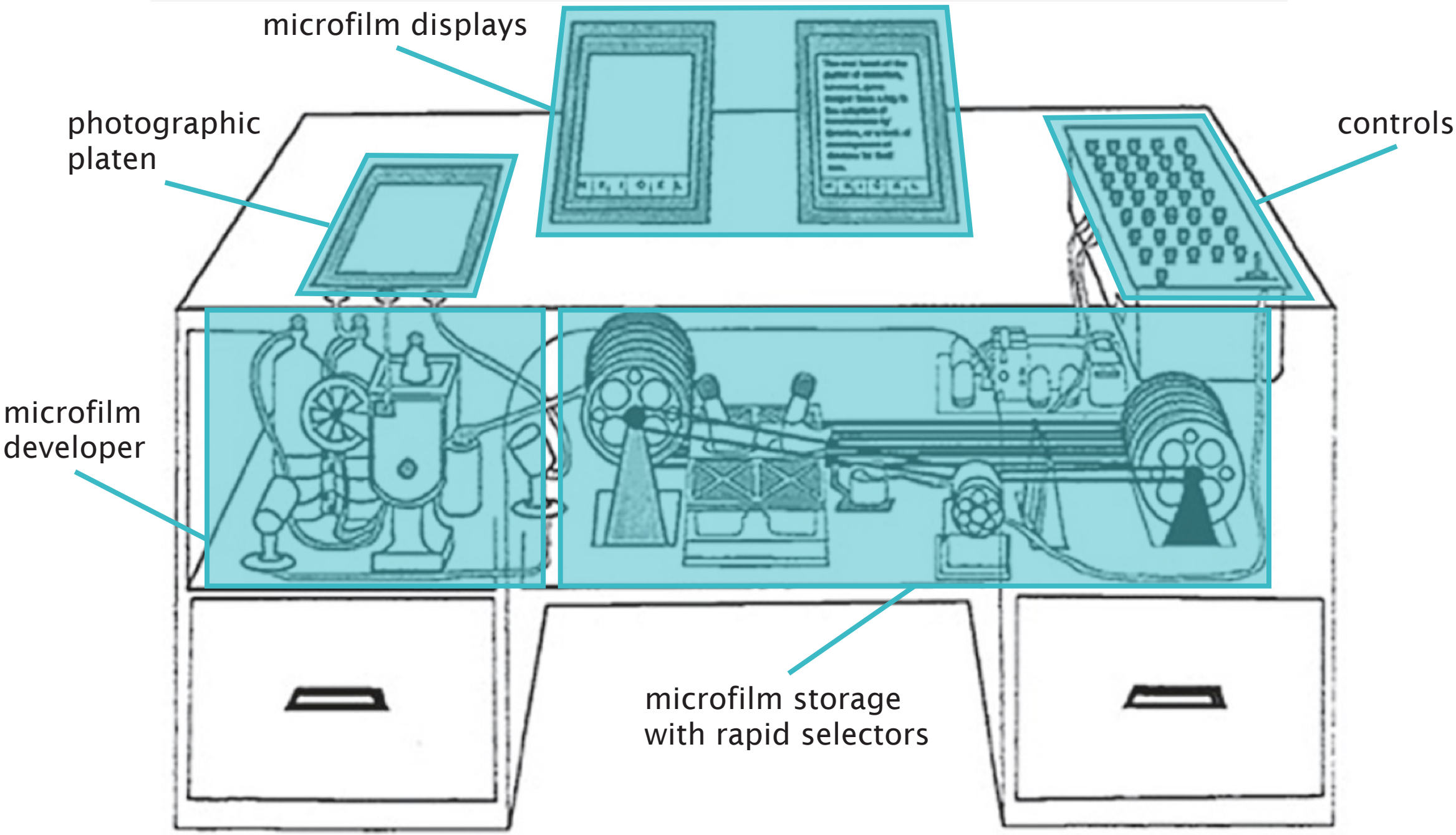
microfilm displays
photographic platen
controls
microfilm developer
microfilm storage with rapid selectors

The Memex

"The process of tying two things together is the important thing"

Key notion is of a *trail:*

- Link between pages
- Stored (branching) sequence of pages

"a new profession of trail blazers, those who find delight in the task of establishing useful trails through the enormous mass of the common record"

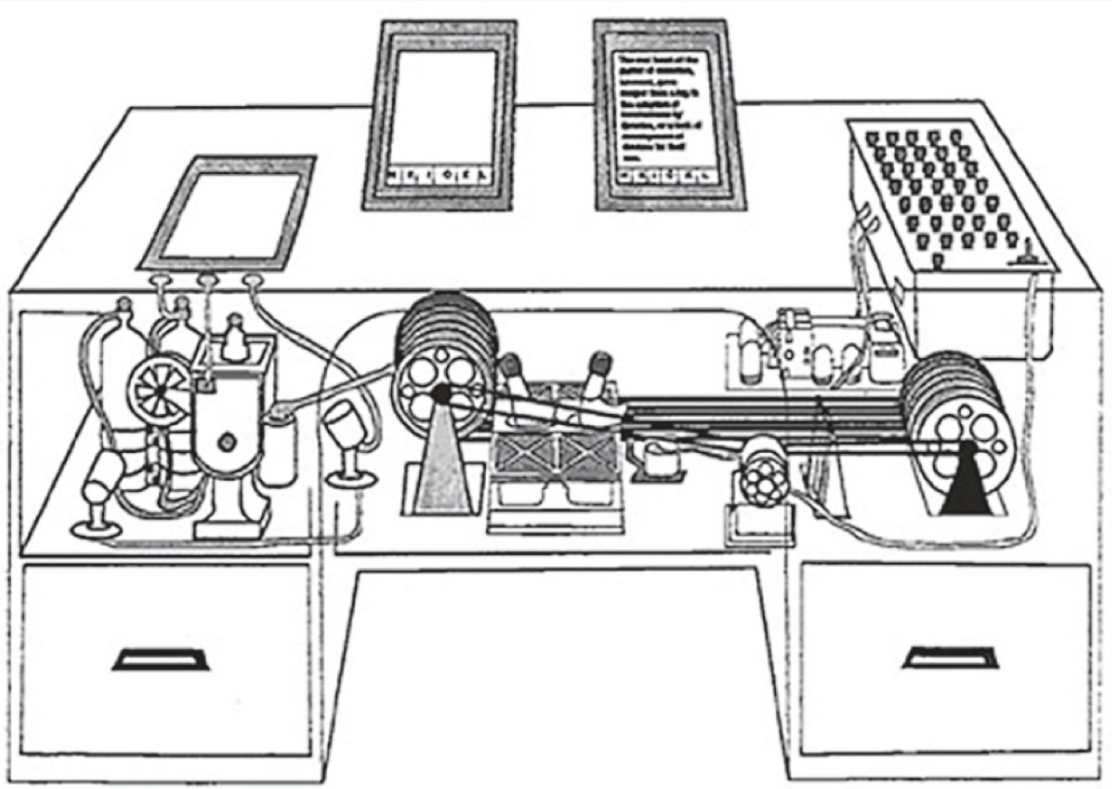

As We May Think

Wholly new forms of encyclopedias will appear, ready made with a mesh of associative trails running through them, ready to be dropped into the memex and there amplified.

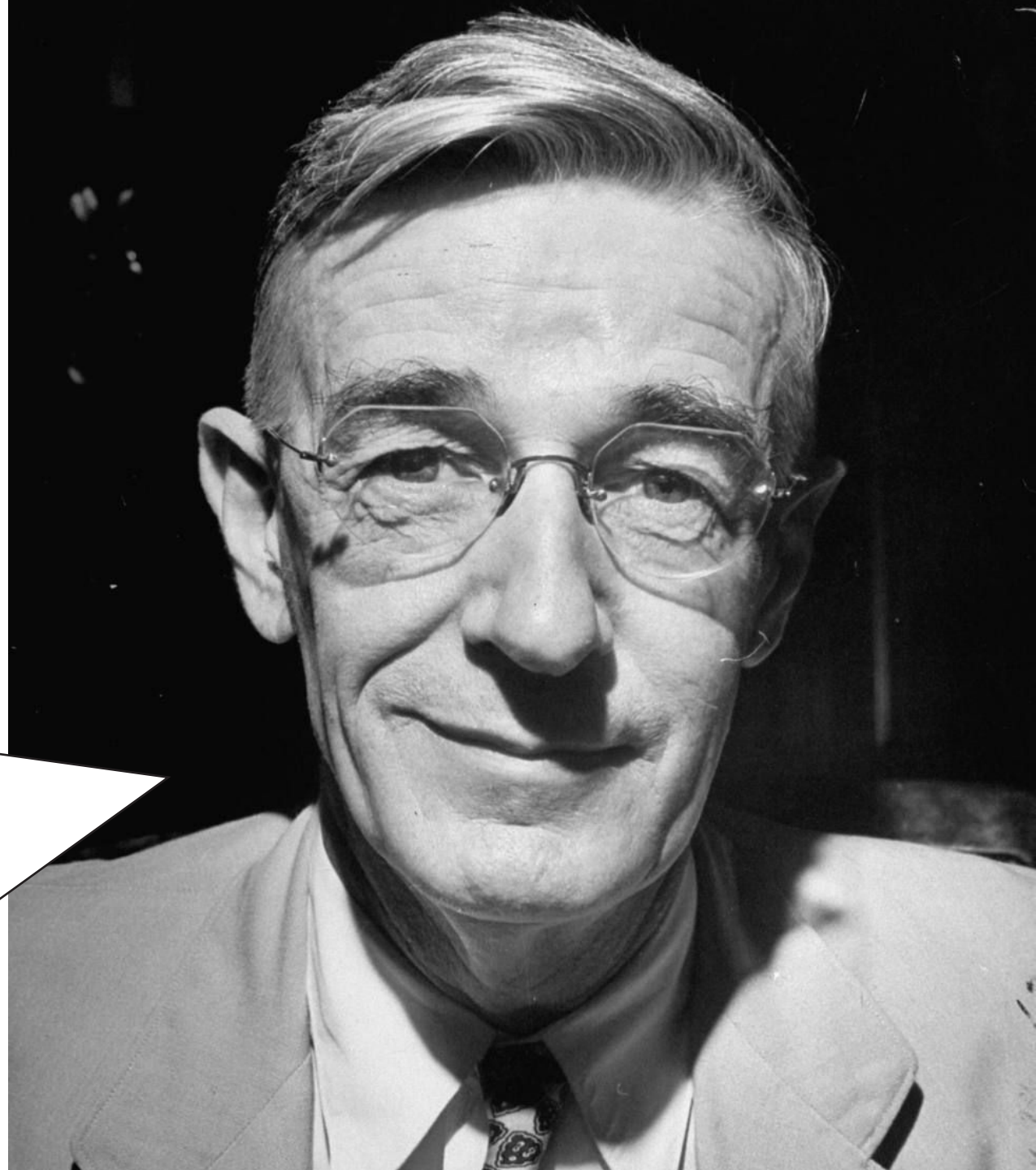

Bush, V. (1945) *As We May Think*. The Atlantic Monthly, 176, pp.101-108.

The Information Age

Computer History Museum

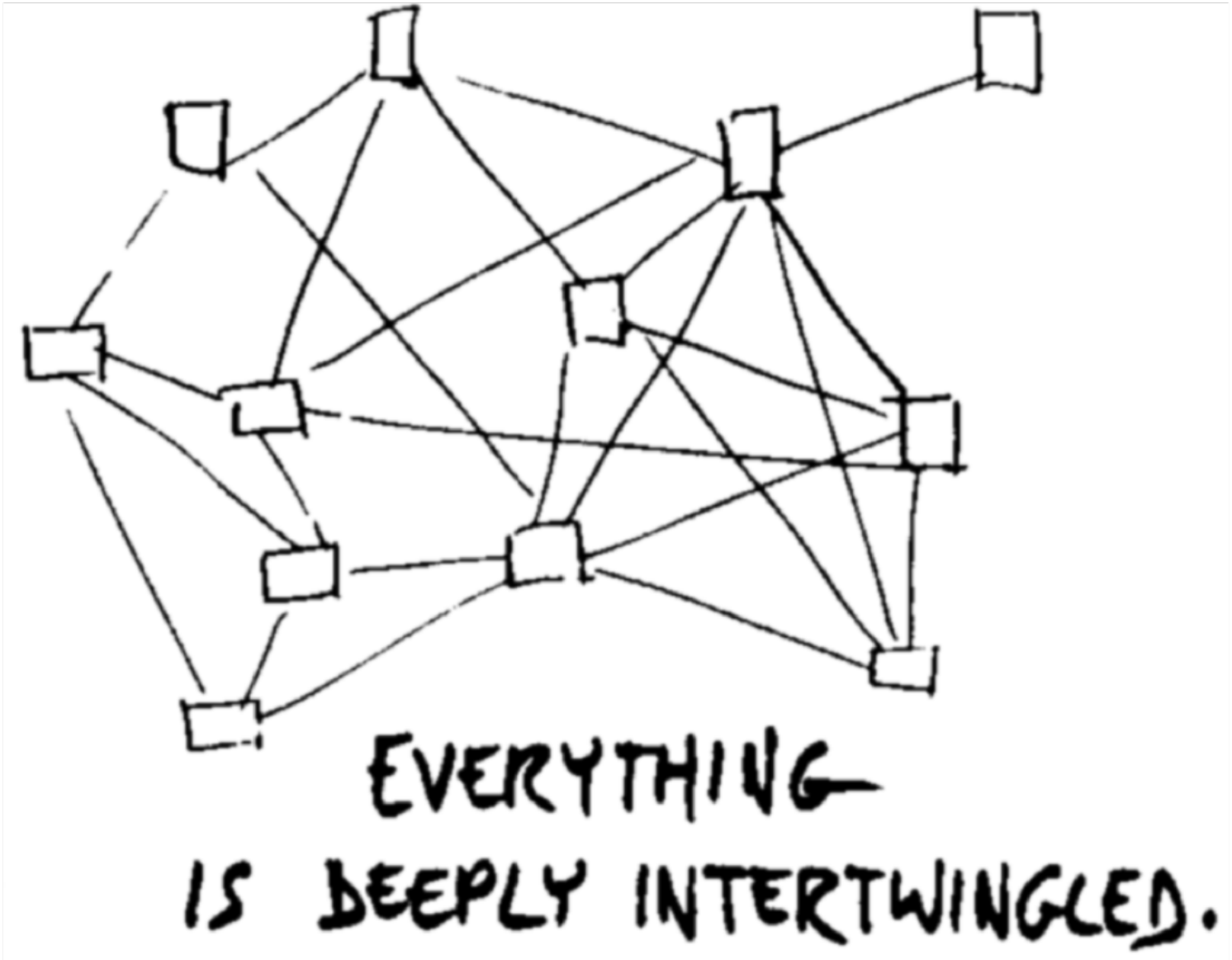

Nelson, T.H. (1974) *Computer Lib/Dream Machines*. Chicago, IL: Nelson, T.H.

Doug Engelbart

Member of the Stanford Research Institute

While at SRI, founded the
Augmentation Research Center

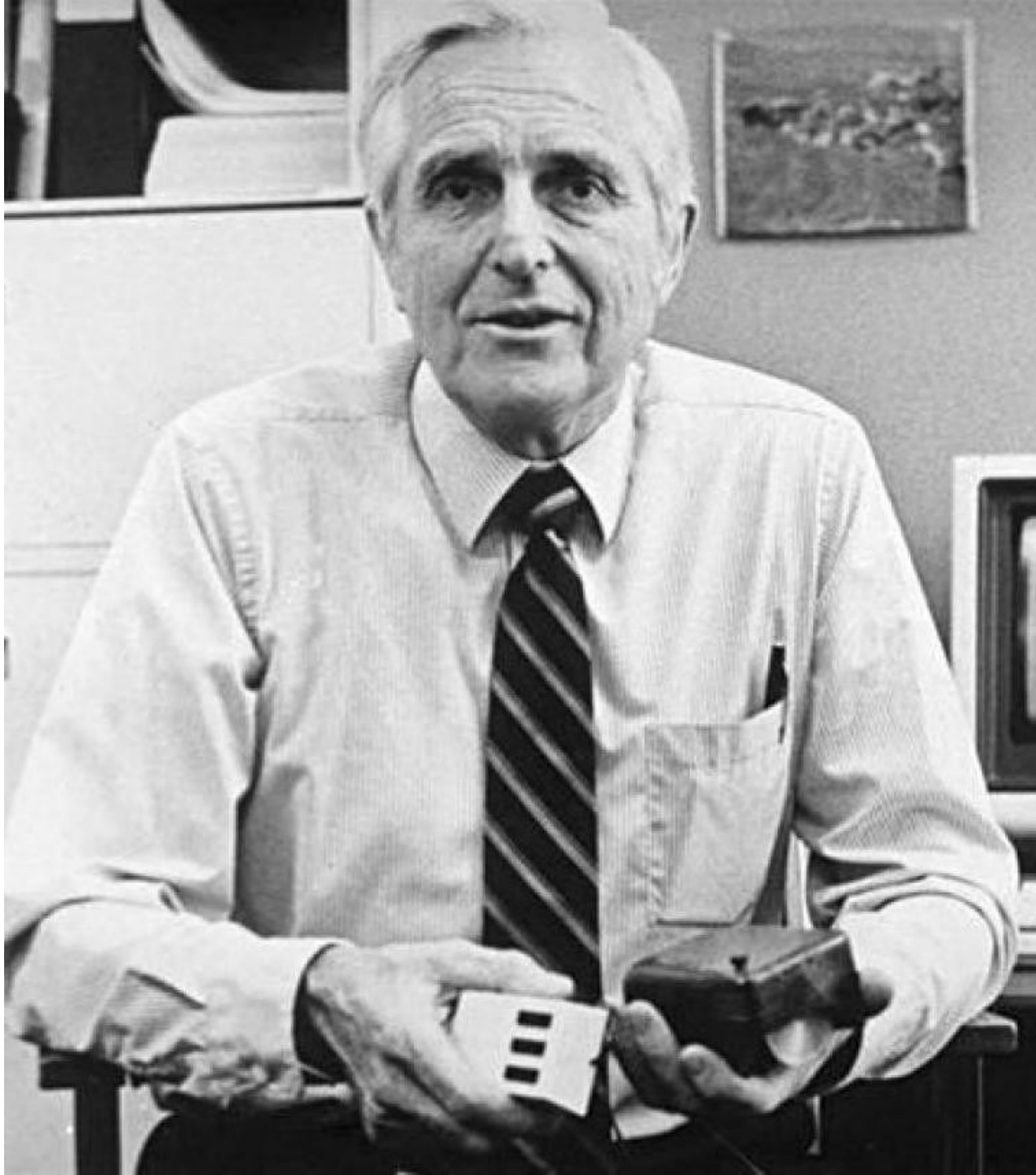

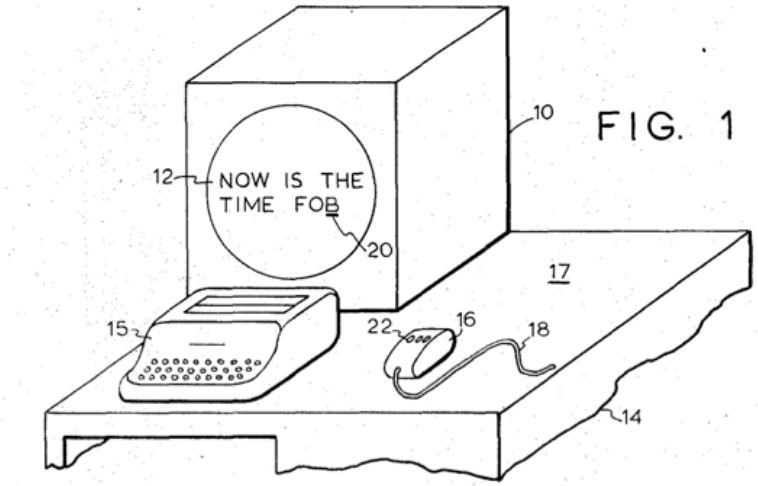

FIG. 1

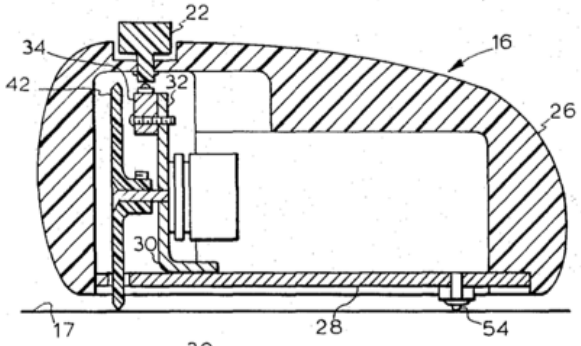

FIG. 2

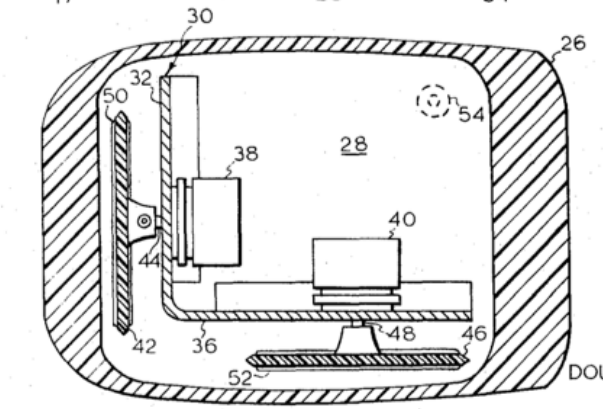

FIG. 3

INVENTOR.
DOUGLAS C. ENGELBART

Engelbart, D.C. (1970) *X-Y Position Indicator for a Display System*. US Patent 3,541,541.

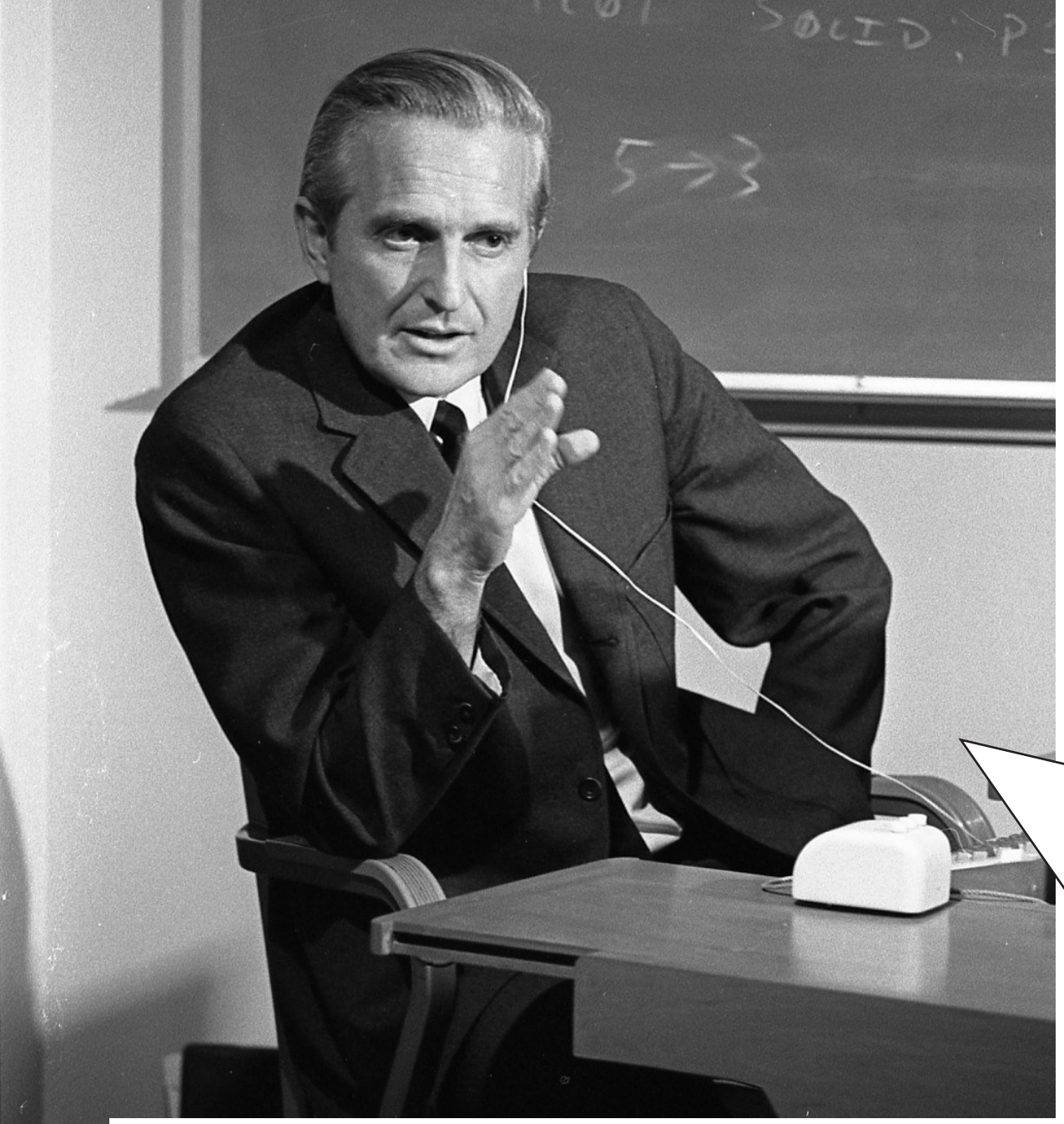

UNIVERSITY OF Southampton

Augmented external symbol manipulation

In this stage [of the evolution of individual human intellectual capability], symbols with which the human represents the concepts he is manipulating can be arranged before his eyes, moved, stored, recalled, operated upon according to extremely complex rules—all in very rapid response to a minimum amount of information supplied by the human, by means of special cooperative technological devices.

Engelbart D.C. (1962) *Augmenting Human Intellect: A Conceptual Framework*. SRI Summary Report AFOSR-3223. USA: Stanford Research Institute.

NLS: the oN-Line System

Timesharing computer with multiple consoles

UI features:

- Windowed display
- Mouse
- Chorded keyboard
- Videoconferencing
- Links in content!

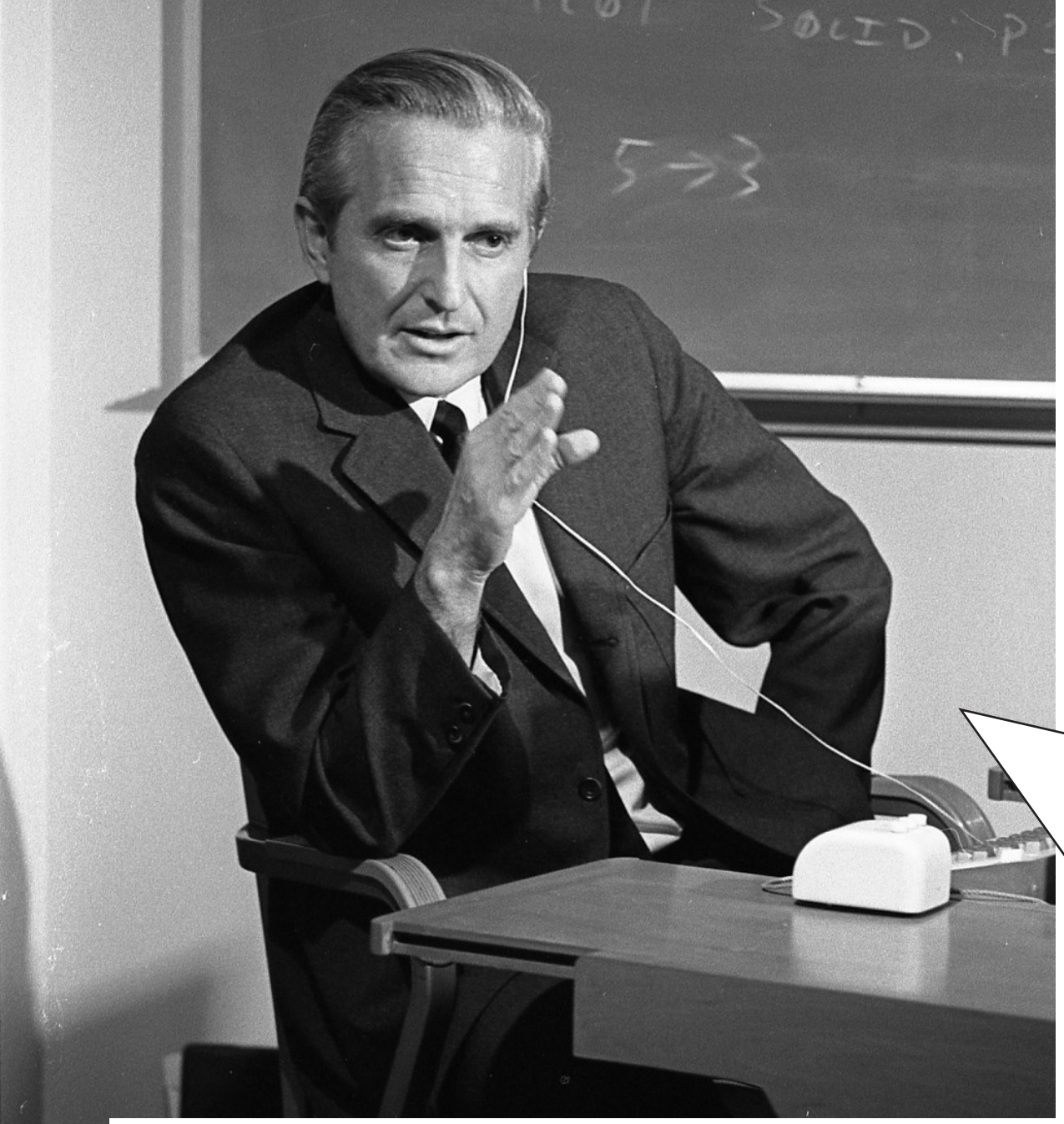

UNIVERSITY OF Southampton

Augmenting human intellect

[...] we are concentrating fully upon reaching the point where we can do all of our work on line — placing in computer store all of our specifications, plans, designs, programs, documentation, reports, memos, bibliography and reference notes, etc., and doing all of our scratch work, planning, designing, debugging, etc., and a good deal of our intercommunication, via the consoles.

Engelbart D.C. and English W.K. (1968) *A Research Center for Augmenting Human Intellect*. AFIPS Conference Proceedings of the 1968 Fall Joint Computer Conference. Vol.33, pp.395-410.

monday afternoon

december 9

3:45 p.m. / arena

Chairman:
DR. D. C. ENGELBART
Stanford Research Institute
Menlo Park, California

a research center for augmenting human intellect

This session is entirely devoted to a presentation by Dr. Engelbart on a computer-based, interactive, multiconsole display system which is being developed at Stanford Research Institute under the sponsorship of ARPA, NASA and RADC. The system is being used as an experimental laboratory for investigating principles by which interactive computer aids can augment intellectual capability. The techniques which are being described will, themselves, be used to augment the presentation.

The session will use an on-line, closed circuit television hook-up to the SRI computing system in Menlo Park.

Following the presentation remote terminals to the system, in operation, may be viewed during the remainder of the conference in a special room set aside for that purpose.

http://thedemo.org/

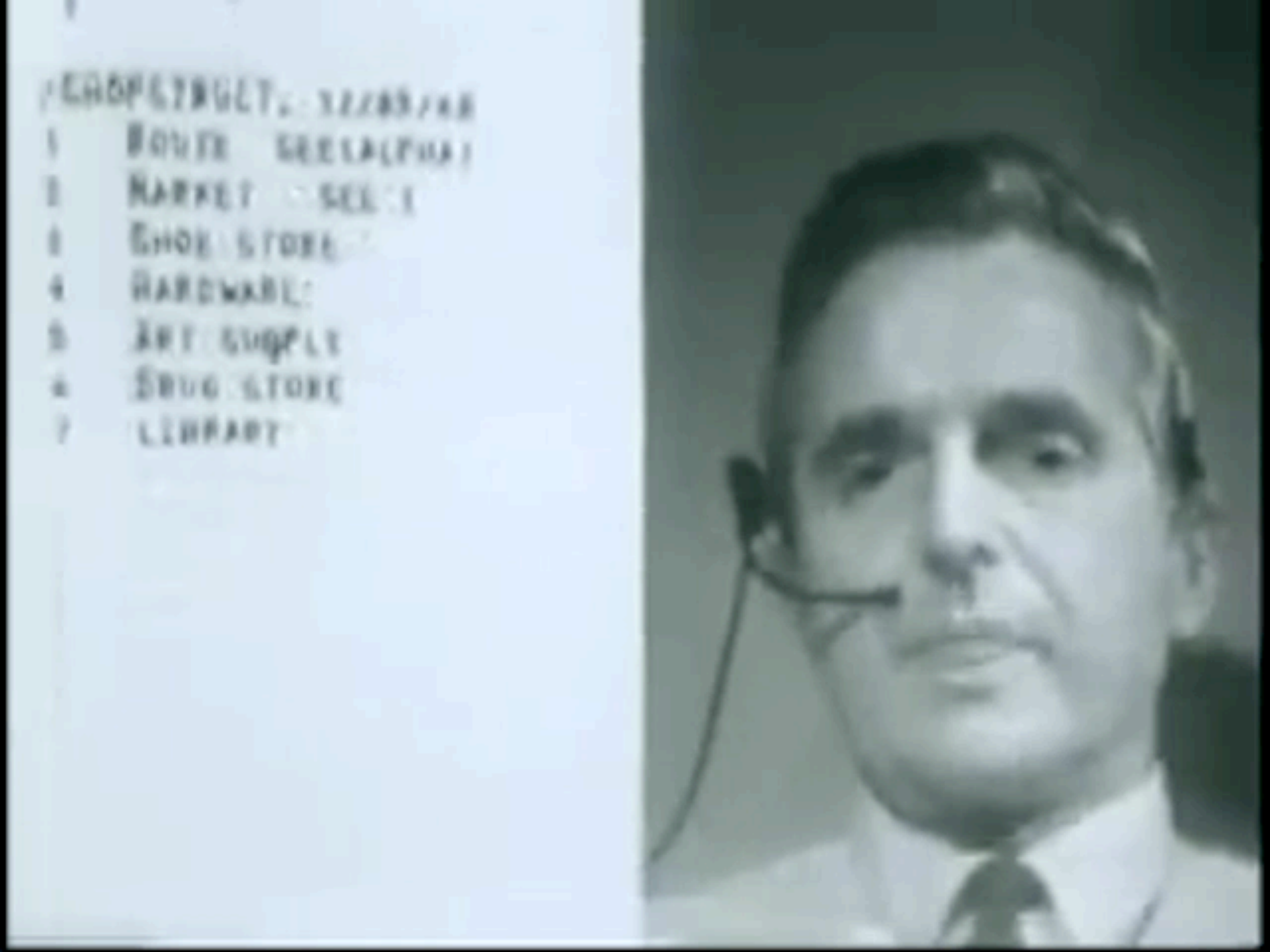
1 ROUTE SEE(ALPHA)
2 MARKET SEE 1
3 SHOE STORE
4 HARDWARE
5 ART SUPPLY
6 DRUG STORE
7 LIBRARY

CONTROL TECHNIQUES
CONTROL DEVICES
CONTROL DIALOGUE
CONTROL METALANGUAGE

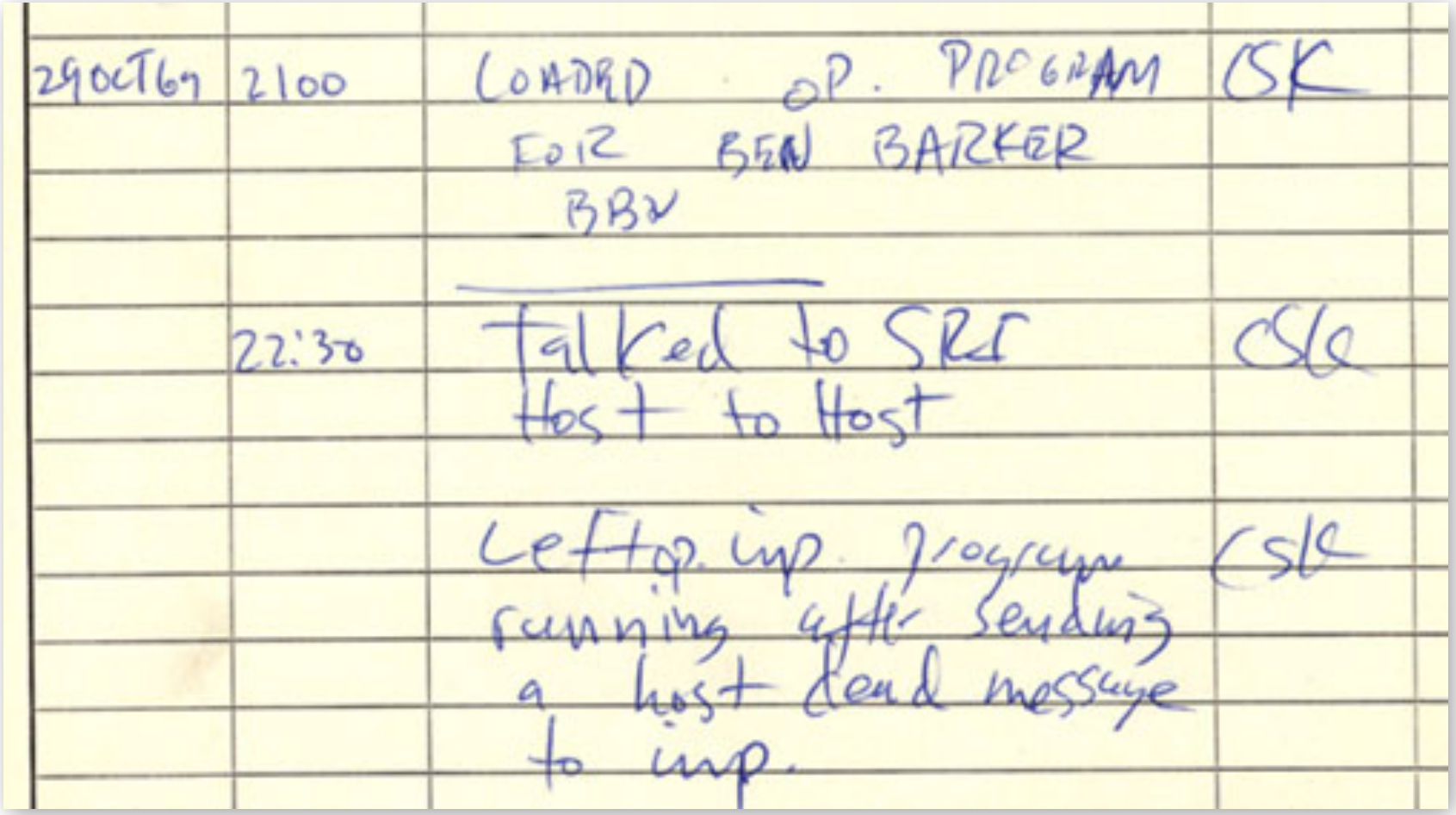

29OCT69	2100	LOADED OP. PROGRAM FOR BEN BARKER BBN	CSK
	22:30	talked to SRI Host to Host	CSC
		Left op. imp. program running after sending a host dead message to imp.	CSC

The birth of the Internet

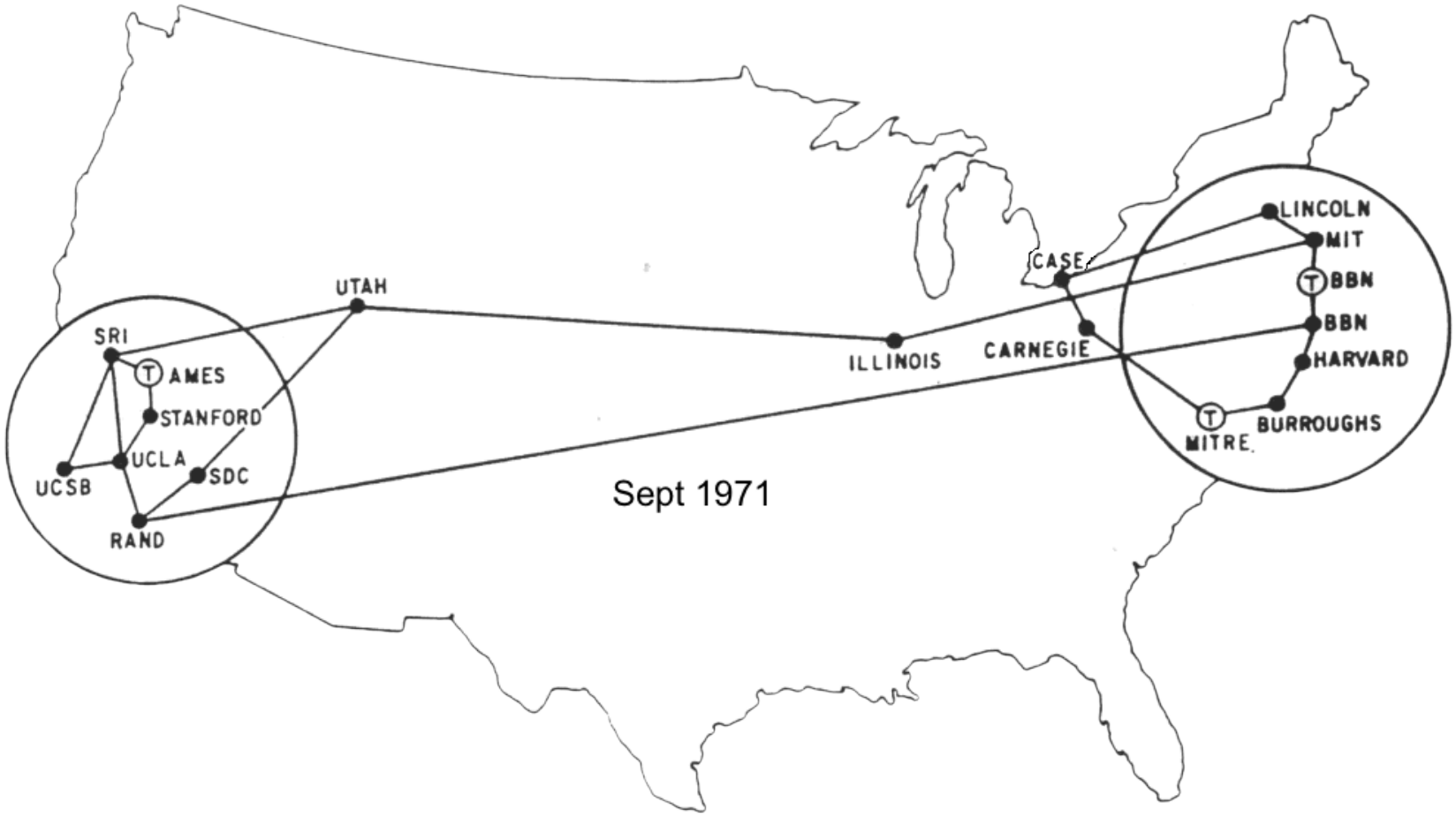

The birth of the Internet

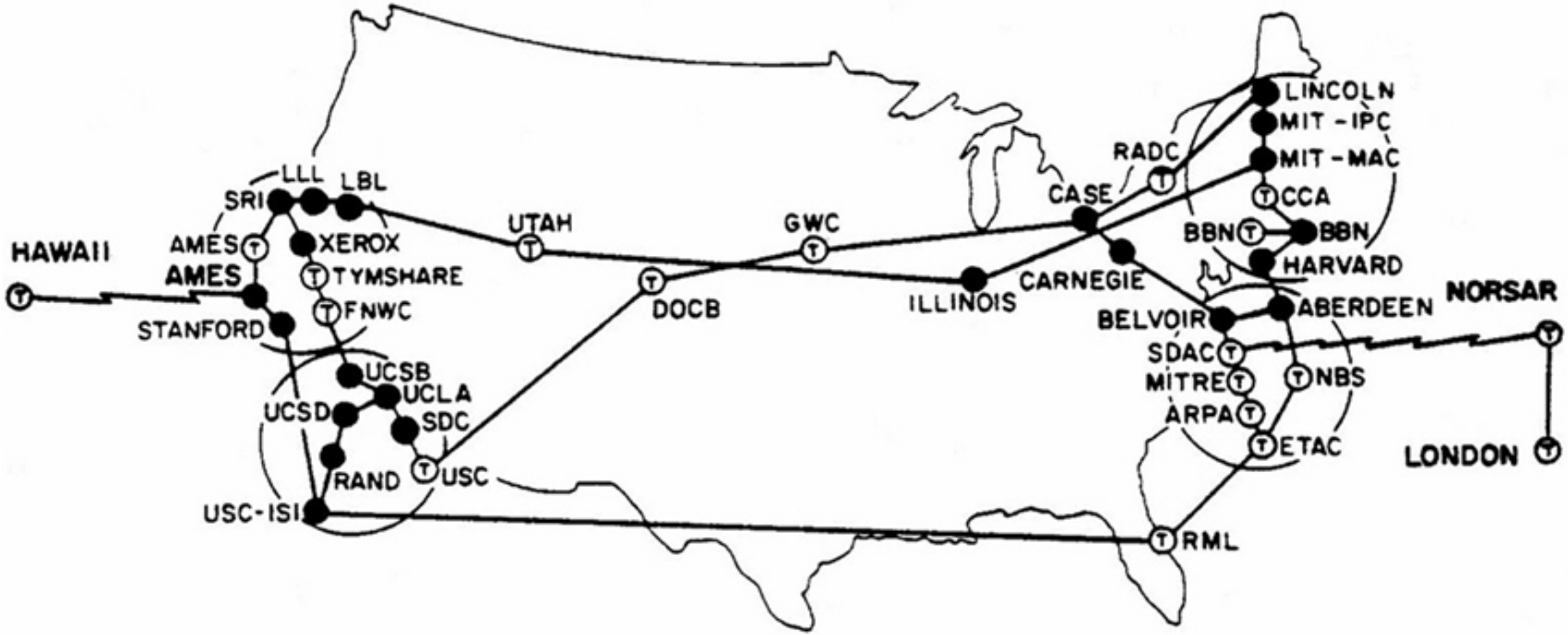

UNIVERSITY OF Southampton

Ted Nelson

Sociologist, philosopher and film maker

Coined the term “hypertext” in 1965

A user interface should be so simple that a beginner in an emergency can understand it within ten seconds.”

Most people are fools, most authority is malignant, God does not exist, and everything is wrong.

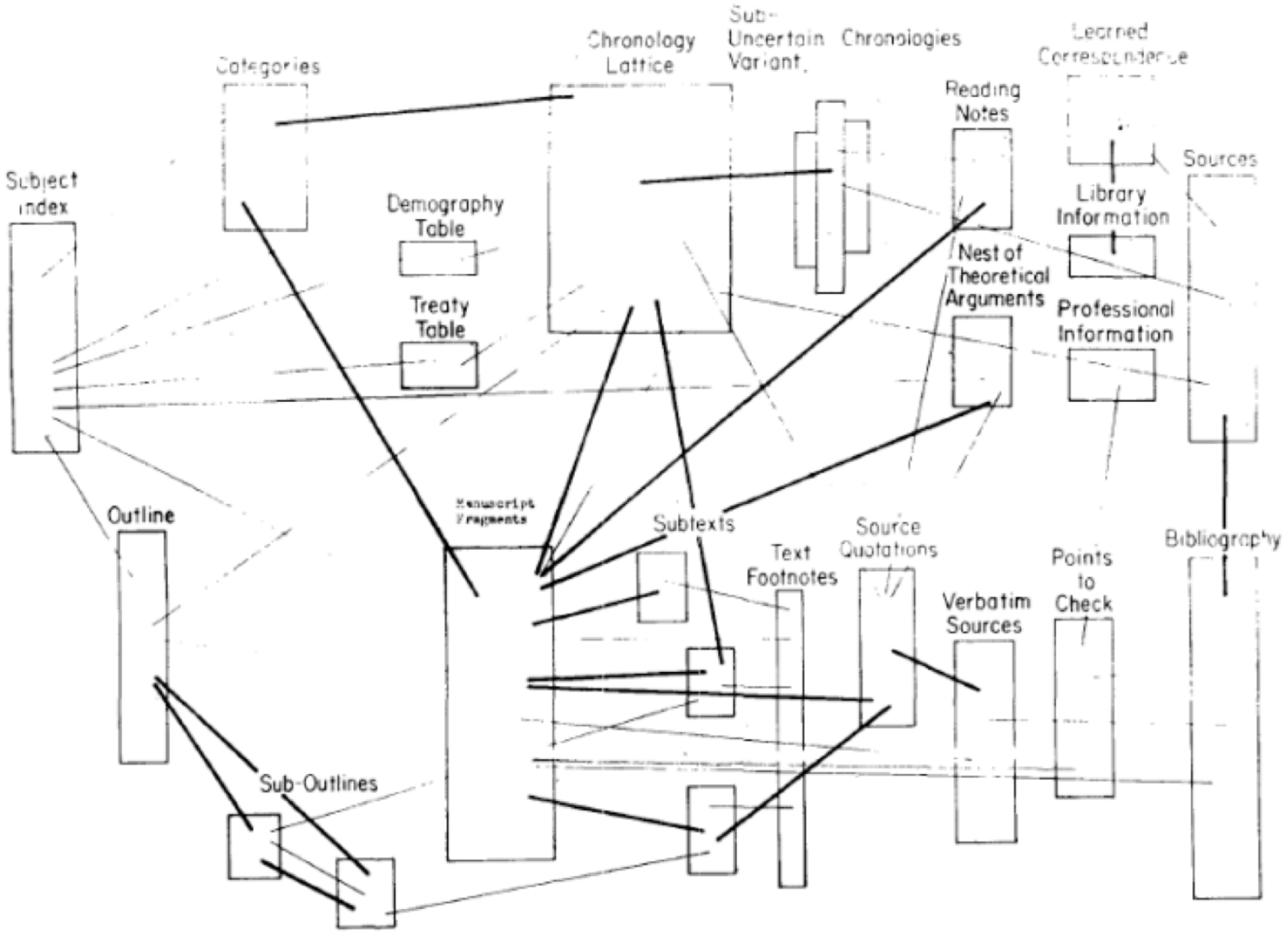

Nelson, T.H. (1965) *A File Structure for the Complex, the Changing and the Indeterminate*. Proceedings of the ACM 20th National Conference, pp. 84-100

Hyperland (1990) Produced by Max Whitby [Television Programme]. London: British Broadcasting Corporation.

Computer Lib / Dream Machines

"No one's life has yet been simplified by a computer."

Two books in a dos-a-dos binding:

- Computer Lib is a clarion call for people to understand computers deeply
- Dream Machines is a sketch of the flexible media potential of computers

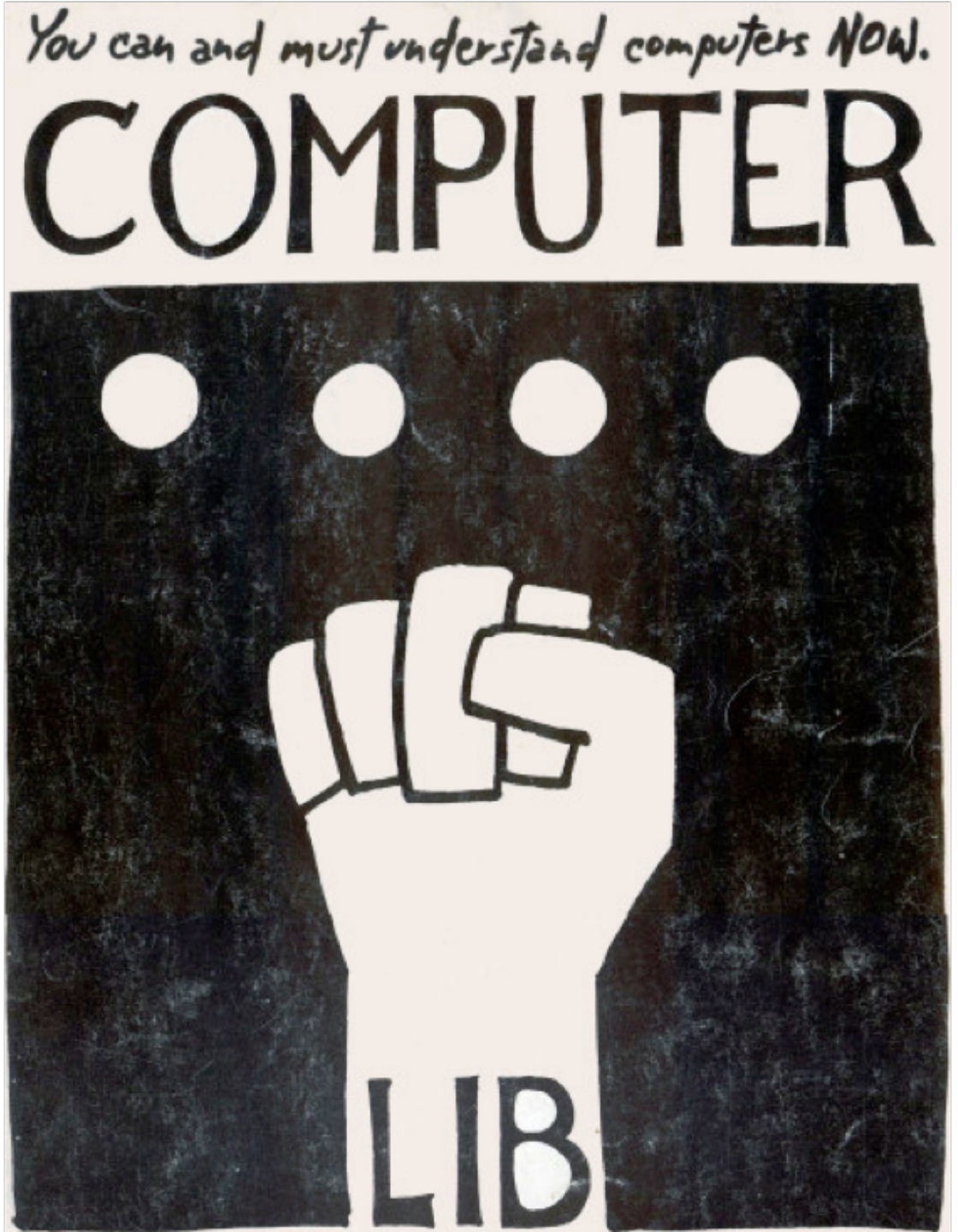

Nelson, T.H. (1974) *Computer Lib/Dream Machines*. Chicago, IL: Nelson, T.H.

A Vision in a Dream

In 1797, Samuel Taylor Coleridge (supposedly) wrote the poem Kubla Khan after awaking from an opium dream:

In Xanadu did Kubla Khan
A stately pleasure-dome decree:
Where Alph, the sacred river, ran
Through caverns measureless to man
Down to a sunless sea.

He was interrupted by a visitor from Porlock, and never completed the poem…

Project Xanadu (1960-)

Founded in 1960, still ongoing
(also famously never completed...)

Hugely influential, nonetheless

Described in *Dream Machines*, and Nelson's subsequent book *Literary Machines*

Nelson, TH. (1993) *Literary Machines*. Sausalito, CA: Mindful Press.

Hyperland (1990) Produced by Max Whitby [Television Programme]. London: British Broadcasting Corporation.

Project Xanadu

- Intercomparison of parallel documents
- World-wide publishing without barriers
- Transclusion
- Transcopyright
- Versioning
- Links that don't break

Nelson, T.H. (1972) *As We Will Think*. Proceedings of Online 72 Conference, Uxbridge, England.

Addressing

Document addressing in Xanadu uses numeric identifiers known as *tumblers*

Expandable, write-once address space that allows referencing of document fragments

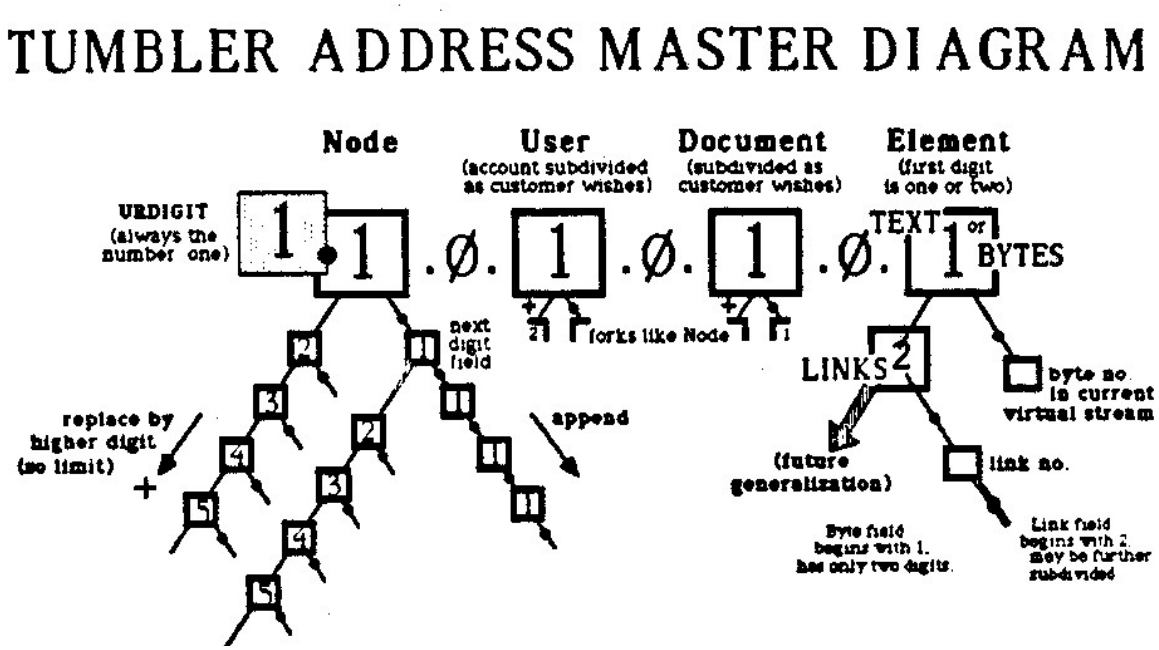

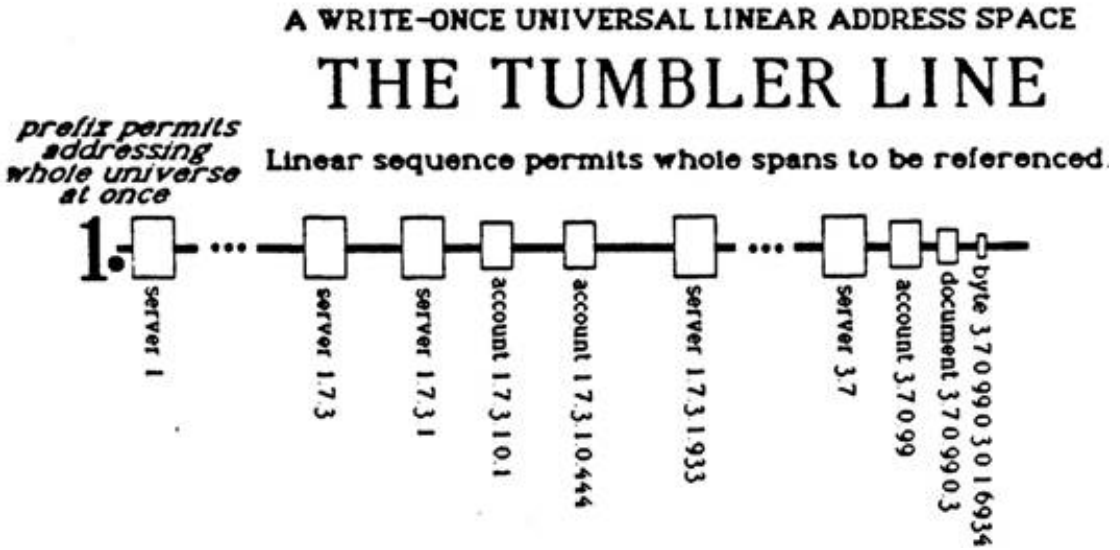

Nelson, TH. (1993) *Literary Machines*. Sausalito, CA: Mindful Press.

Links

Can be stored separately from documents (i.e. first-class)

Can be stored within a document (in its link-train)

N-ary – multiple addresses in the from-set and to-set

Multiple types associated with the link (via the three-set – more addresses)

- Markup considered as link type!

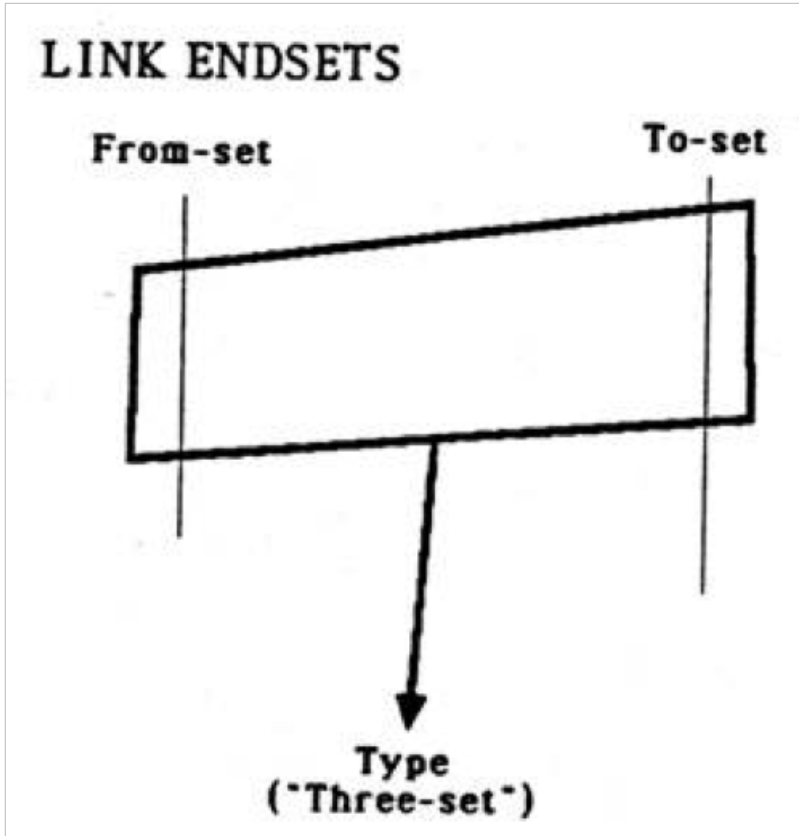

Nelson, T.H. (1997) *Embedded markup considered harmful*, World Wide Web Journal 2(4).

Transclusion

Documents are composite objects that can contain parts of other documents, via special links: transclusions

Instead of copy and pasting, the address of a fragment of another document is inserted and the referenced content is retrieved and displayed at runtime

(also provides a mechanism for tracking fractional royalties for use of these fragments – transcopyright)

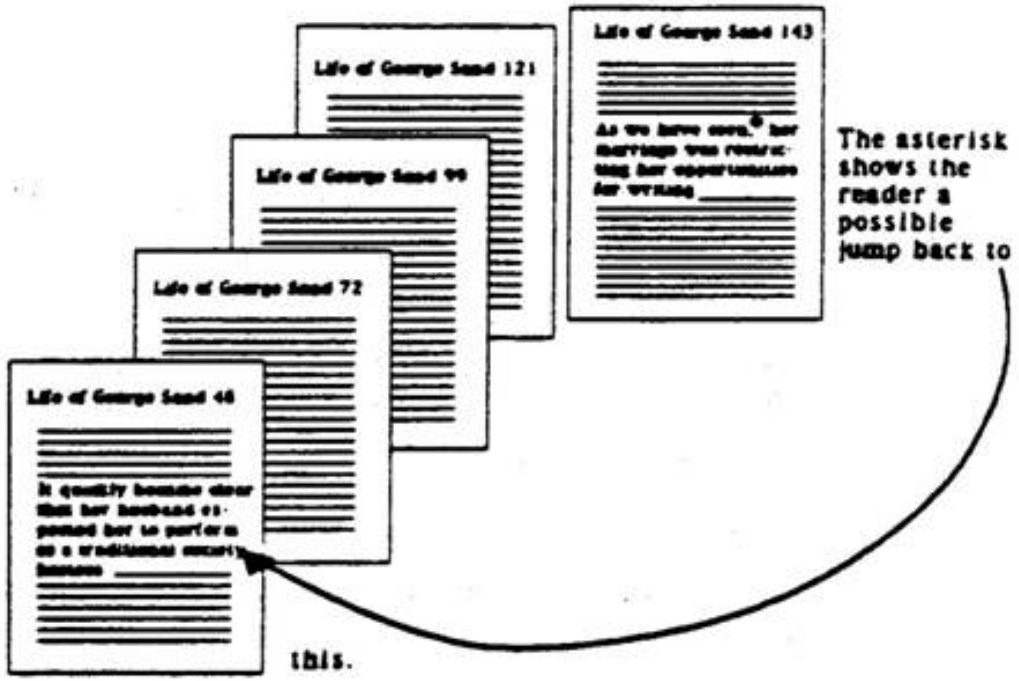

Nelson, TH. (1993) *Literary Machines*. Sausalito, CA: Mindful Press.

Versioning

Transparent versioning of documents

- Editing a document creates a new *revision* (possibly with transclusion of material from previous version)
- Versioning also permits different *variants* (alternative versions) of a document

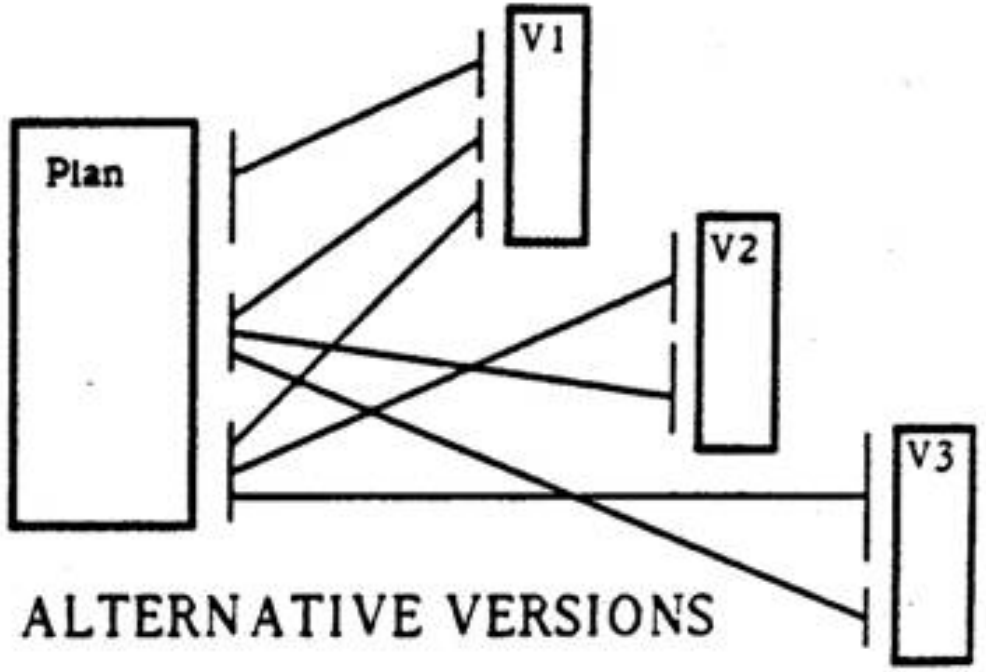

Nelson, TH. (1993) *Literary Machines*. Sausalito, CA: Mindful Press.

Distribution

Xanadu separates the front end clients that display content to users from the back end servers that manage that content

Front End to Back End (FEBE) Protocol

- Used for user interaction

Back End to Back End (BEBE) Protocol

- Used to manage consistency between back end servers

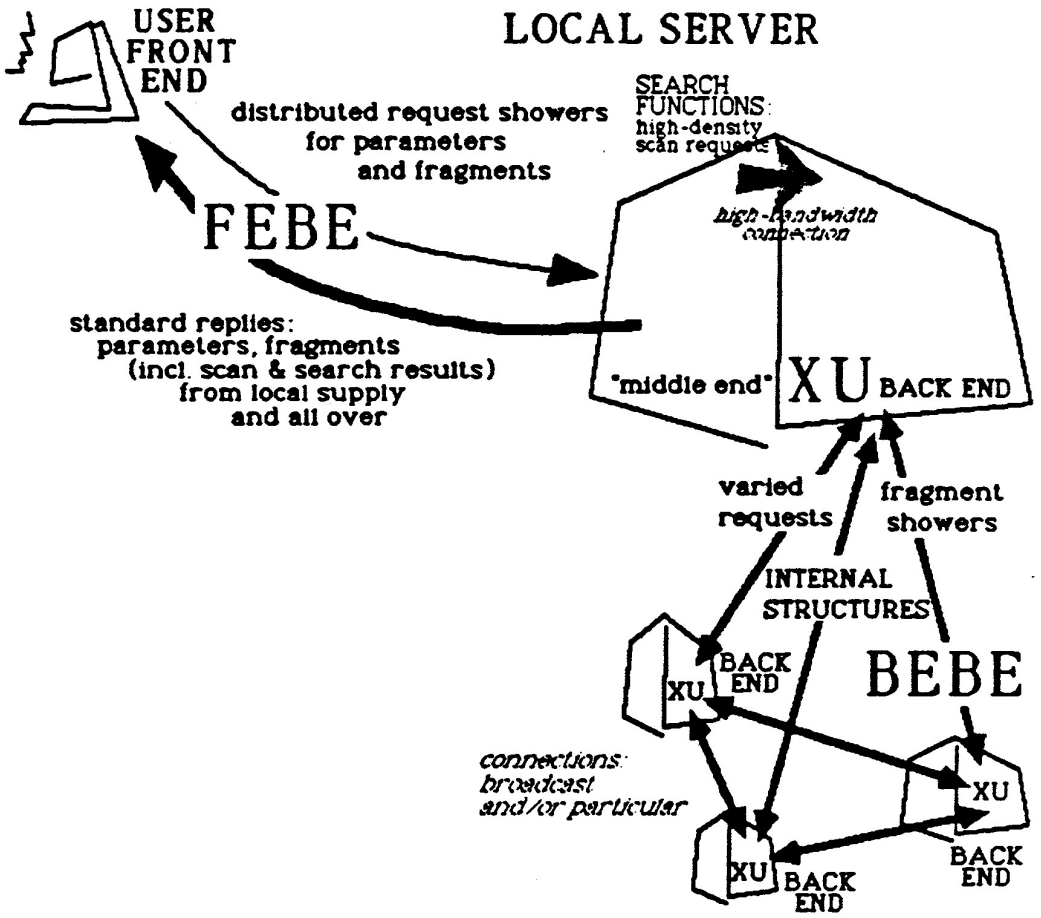

Nelson, TH. (1993) *Literary Machines*. Sausalito, CA: Mindful Press.

THE 2020 VISION

Forty years from now (if the human species survives), there will be hundreds of thousands of file servers--machines storing and dishing out materials. And there will be hundreds of millions of simultaneous users, able to read from billions of stored documents, with trillions of links among them.

All of this is manifest destiny. There is no point in arguing it; either you see it or you don't. Many readers will choke and fling down the book, only to have the thought gnaw gradually until they see its inevitability.

The system proposed in this book may or may not work technically on such a scale. But some system of this type will, and can bring a new Golden Age to the human mind.

Nelson, TH. (1980) *Literary Machines*. Sausalito, CA: Mindful Press.

UNIVERSITY OF Southampton

Nelson on the Web

The Xanadu project did not 'fail to invent HTML'. HTML is precisely what we were trying to PREVENT – ever-breaking links, links going outward only, quotes you can't follow to their origins, no version management, no rights management.

UNIVERSITY OF Southampton

Next Lecture: Trailblazers, Part 3